The Marine Vessel's Electrical Power System: From its Birth to Present Day

Espen Skjong[1,2,3], Egil Rødskar[3], Marta Molinas[1], Tor Arne Johansen[1,2] and Joseph Cunningham[4]

***Abstract*—The evolution of the use of electricity in marine vessels is presented and discussed in this article in a historical perspective. The historical account starts with its first commercial use in the form of light bulbs in the SS Columbia in 1880 for illumination purposes, going through the use in hybrid propulsion systems with steam turbines and diesel engines and transitioning to our days with the first case of electric marine vessel entirely based on the use of batteries in 2015. Electricity use is discussed not only in the light of its many benefits but also of the challenges introduced after the emergence of the marine vessel electrical power system. The impact of new conversion technologies like power electronics, battery energy storage and the dc power system on the trajectory of this development is thoroughly discussed. The article guides the reader through the different stages of this development influenced by the different forms electricity took in the marine vessel, with emphasis on how electricity was used has impacted the marine vessel power system development.**

***Index Terms*—Marine vessel electrical power system, propulsion system, steam turbine, diesel-electric propulsion, variable speed drives, power electronics**

I. Introduction

Figure 1 indicates and guides the reader through the stages of development of the marine vessel electrical power system as treated in this paper. The impact of new inventions and disruptive technologies as well as the impact of disruptive events in society such as wars, is discussed. Starting with the earliest records of a commercially available shipboard electrical system which dates back to the 1880 with the onboard dc system at the *SS Columbia*, inventions such as the AC induction motor and the diesel engine have triggered new research and developments towards the end of the 19 century and the beginning of the 20th. In this period, the initial steps were given in research related to submarines, batteries, steam turbines and diesel engines. The two more important developments before WWI were the first diesel-electric vessel (*Vandal*) in 1903 and the first naval vessel with electric propulsion in 1912 (*USS Jupiter*). During the period of rising tension that preceded WWI the first cargo vessels with turbo-electric propulsion were conceived and developed in USA and UK. The outbreak of WWII stimulated new developments that brought the T2-tanker with turbo-electric propulsion into the picture. Also in this period, research on air independent propulsion (AIP) for submarines has been started and ended with the first submarine with AIP in the period that followed the end of the war. Nuclear powered vessels emerged in the end of the 50s and the first passenger liner to use alternating current was inaugurated in 1960 (*SS Canberra*), 70 years after the invention of the alternating current motor. In the period 1956-1985, the power electronics revolution triggered by the disruptive solid-state technology, marked the point of departure towards a new era for marine vessels; the era of the all-electric ships (AES). As a result of that, *Queen Elizabeth II* was inaugurated in 1987 with the first diesel-electric integrated propulsion system. And in the last two decades of the present time, the marine vessel community has witnessed the development of the first vessels having LNG as fuel. In January 2015, marking the milestone of the era of the *all-electric ship*, the world's first purely battery-driven car and passenger ferry *Ampere* has been placed in use (commissioned October 2014) and is being regularly operated in Norway. In what follows, a comprehensive account is made of the different stages of the marine vessel's development and the impact the use of electricity has had in its evolution.

II. The Birth of the Marine Vessel Power Grid

In the late 1830s the German inventor Moritz Hermann von Jacobi (Yakobi [1]) invented a simplistic dc motor and conducted a couple of experiments with small boats able to carry about a dozen passengers with electric propulsion. The electric motor in his last experiment (about 1kW) was powered by a battery consisting of 69 Grove cells resulting in a speed of about 4 km/h. Due to the early motor design, which carried many imperfections, the invention was not adopted and used in any practical applications and was soon forgotten [1], [2], [3].

Commercially available electric systems first appeared on ships during the early 1870s in the form of gun firing circuits powered by battery cells. Electric call bells appeared on luxury passenger liners about the same time. The development of electric arc lamps by Charles Brush, Edwin Weston, Elihu Thomson, Hiram Maxim, and others for the illumination of streets and large public spaces in the mid/late 1870s was paralleled by the installation of electric arc searchlights on ships. Powered by steam driven generators, the primary function of such lights was to illuminate marauding attack boats and also to blind enemy gun crews during close engagements for some of the early lamps were as bright as 11,000 candlepower. Most systems were direct current but alternating current systems were also employed [4], [5].

[1] Department of Control Engineering, Norwegian University of Science and Technology
[2] Centre for Autonomous Marine Operations and Systems
[3] Ulstein Power & Control AS
[4] Engineering History author, consultant, and adjunct instructor
Email: espen.skjong@ulstein.com, egil.rodskar@ulstein.com, marta.molinas@ntnu.no, tor.arne.johansen@itk.ntnu.no, joscunningham@gmail.com

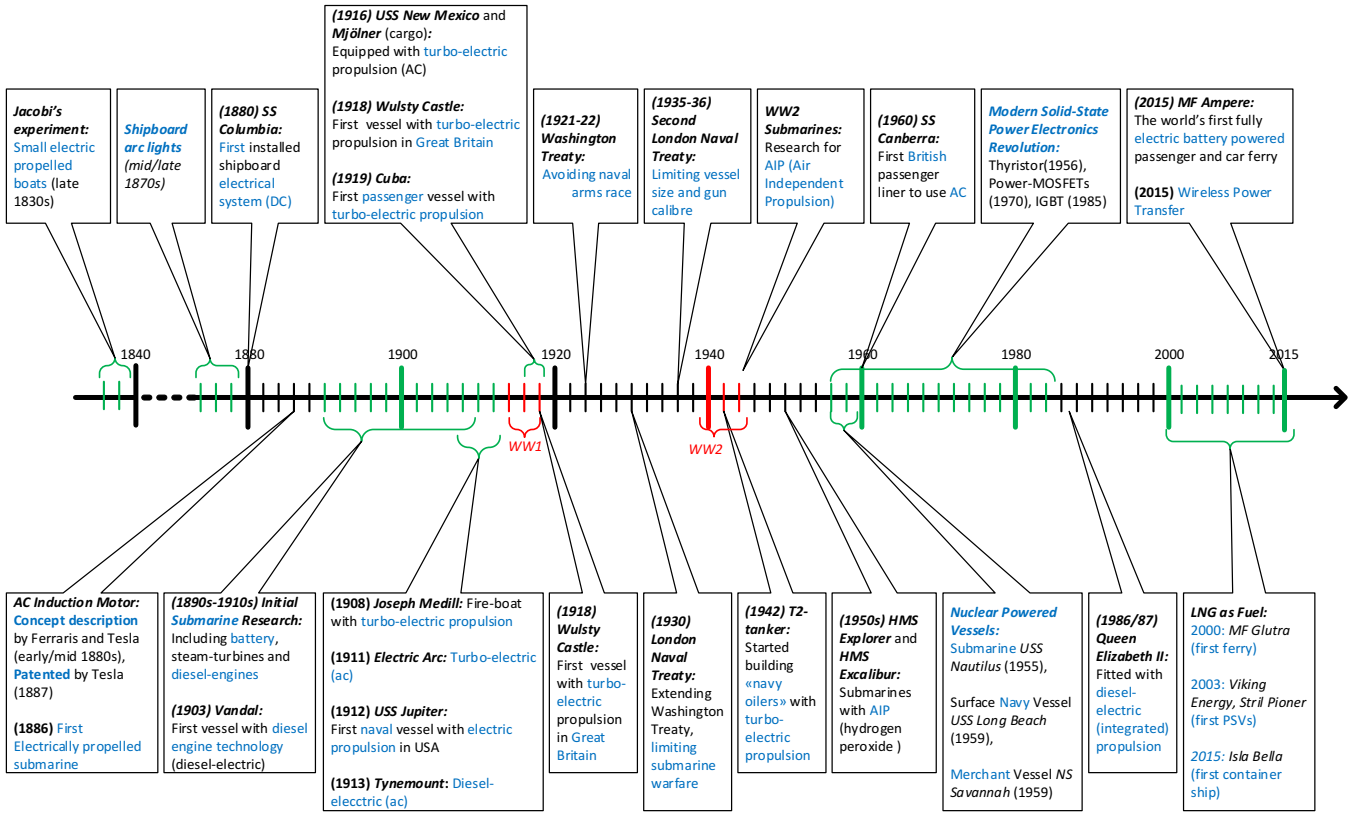

Fig. 1. Time-line with the historical highlights of the Marine Vessel's Power System Development.

In the mid-1878 Thomas Edison (1847-1931) developed an incandescent electric light bulb for the consumer market. However, there were no commercial electrical system for generating and distributing electricity to end users. Edison knew that for the light bulb to achieve commercial success, he had to build an electric distribution system using direct current (dc), and his idea was a central power station with a system of electrical conduction radiating out of it, reaching multiple end users. After a successful demonstration in 1879, staged on his property in Menlo Park, New Jersey, where he had installed a lighting system to illuminate some of the houses and imaginary streets powered by a dynamo in his laboratory, he met skepticism from invited business leaders and potential investors. They were all reluctant to invest in the low-voltage dc system without more proof of the system's commercial viability [6]. Among the attendees was the president of the *Oregon Railway and Navigation Company*, Henry Villard, who, after the demonstration, immediately saw the benefits of the technological advancement demonstrated by Edison. One thing lead to another, and even though Edison didn't have any offshore installations in mind when developing the lighting system, Villard ordered an installation of the lighting system for his company's new steamship, *SS Columbia* (figure 3a), which was under construction by a shipyard in Chester, Pennsylvania.

First electric light system installation in ships: After the installation of the new lighting system, the *SS Columbia* was equipped with 120 incandescent lights, which were distributed

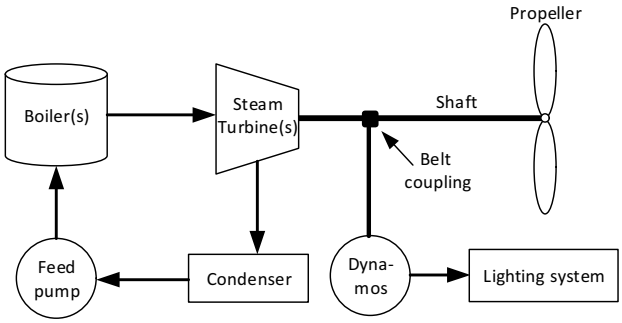

Fig. 2. Simplified drawing of the propulsion and lighting system installed in *SS Columbia*, based on written description [7], [8], [9].

on several circuits and powered by four belt-driven 6kW dynamos (with small internal resistance and large bipolar magnets [11]), see figure 3b, connected to the steam-engine driving the single four-blade propeller through a mechanical shaft. The different circuits were secured by small lead-wires functioning as fuses. Each dynamo could supply 60 lamps, each rated 16 candlepower (1 candlepower is the radiating power of a light with the intensity of one candle). One of the dynamos was operated at reduced voltage for excitation of the three other dynamos' field magnets. The power system didn't include any instrumentation, thus any voltage adjustment was conducted by operators judging the brightness of the lamps in the engine room. Light switches were located in locked wooden boxes, and if the lights were to be turned on or off in

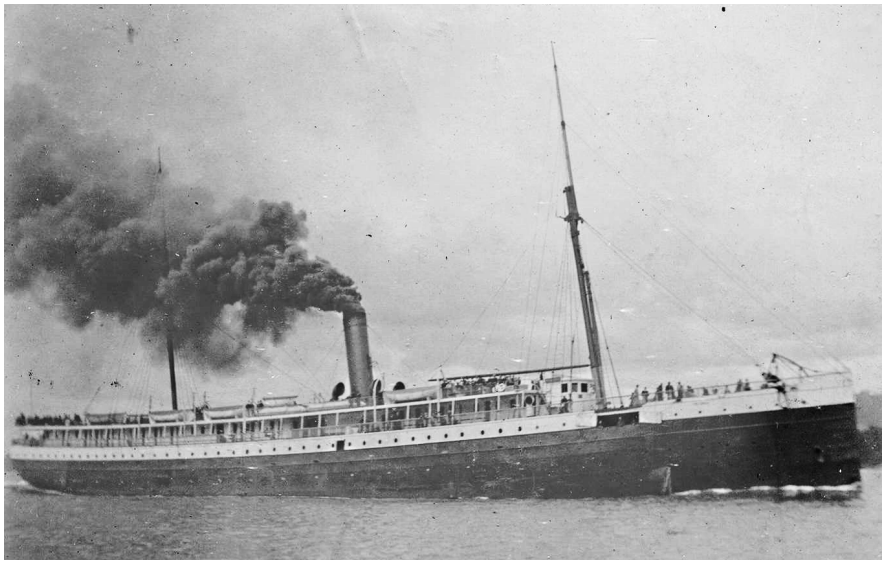

(a) Passenger and cargo vessel *SS Columbia* (1880-1907), owned by the Oregon Railroad and Navigation Company and later the Union Pacific Railroad, was the first ship with Edison's lighting system. Courtesy [10].

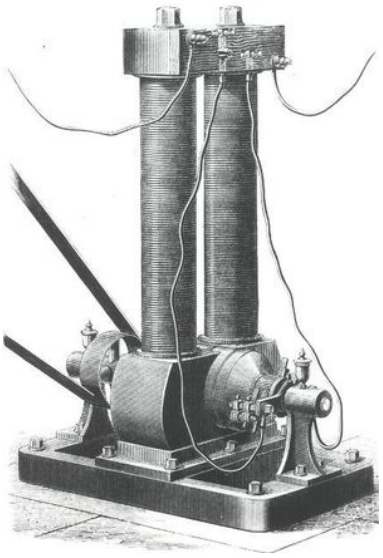

(b) Edison's belt driven "jumbo" dynamo (with the nick name *long-legged Mary-Ann* [11]) was one of the main components in *SS Columbia*'s lighting system. Courtesy [12].

Fig. 3. Edison's lighting system first installed in a ship in 1880, aboard *SS Columbia*.

the cabins, a steward had to come and unlock the boxes [7], [8], [9]. A simplified sketch of the propulsion and lighting system aboard *SS Columbia* is given in figure 2.

The installation of the light system aboard *SS Columbia* proved to be a success, the system worked as intended, and the story was published as a full-page article in *Scientific American* in its May 22nd 1880 issue [13]. Shortly after the success with the electric installation aboard *SS Columbia*, the *Edison Company for Isolated Lighting*[1] installed in 1883 an electrical system aboard a US ship, *USS Trenton* [14]. *USS Trenton*, was, as *SS Columbia*, a modern ship featuring both steel hull and a steam propulsion system with additional sailing rigs. The following year the *Bureau of Navigation* decided that the vessels *Atlanta*, *Boston*, and *Omaha* should be equipped with an electrical lighting system, and shortly after electric lighting became a standard feature aboard both military and commercial vessels. Even though the low-voltage dc electrical system (110V [15]) developed by Edison was only intended for incandescent lamps, and the fact that there are numerous competing claims about the pioneer of electrical installation aboard a ship, the period itself can be considered to mark the birth of the marine vessel's power grid.

Searchlights consumed the majority of power on Navy ships (as much as 50 kW) as compared to the lighting needs of passenger ships (10-20 kW) which did include some arc lamps for navigation purposes. That changed rapidly as electric power for ventilation and motorized gun turrets appeared on Navy ships in the 1880s. The lack of practical alternating current motors led to adoption of direct current as a standard to simplify the overall system. The same was true in many industrial applications until the early 1900s; as the available direct current motors were found to be more efficient than the alternating current designs of the day. Improved wiring and protective devices were also developed [4].

In the late 1880s, Nikola Tesla (United States), a former employee of Edison who left Edison in 1885 [16], Galileo Ferraris (Italy) and Michael Osipowitch von Dilvio-Dobrowolsky (Germany) each had discovered the benefits of two alternating conductors with 90° phase difference (or three conductors with 120° phase difference), which could be used to rotate a magnetic field. This lead to the birth of the induction motor, demonstrated independently by Ferraris and also by Tesla in the early 1880s and patented by Tesla in 1887. Others claimed to have conceived independently the rotating field concept, among them Elihu Thomson, founder of the *Thomson-Houston Company*, and also Oliver Schallenberger of the *Westinghouse Electric & Manufacturing Company*. Charles Bradley, an inventor and entrepreneur in the electrical industry, demonstrated in 1888 an induction motor concept. Also, Frank J. Sprague, graduate of the US Naval Academy, researched electrical systems for US ships then worked for Edison to perfect mathematical estimation for system design and the three wire system for Edison. After leaving Edison he perfected in 1884 the first practical direct current electric motor. It could operate on incandescent electric lighting systems and won Edison's approval. He subsequently developed dc motors to a high state of efficiency for both industry and railways; such motors exceeded the efficiency of available ac motors for many years [17], [18], [19], [5].

A. War of Currents

The invention of the ac motor had a cascade effect which lead to, among other inventions, a polyphase generator (figure 4) and ac distribution systems [21]. Tesla filed in 1887 two patents on the ac motor in October 1887, and three more

[1] *Edison Company for Isolated Lighting* was a separate company in November 1881, which later, December 31 1886, was absorbed by the Edison Electric Light Company

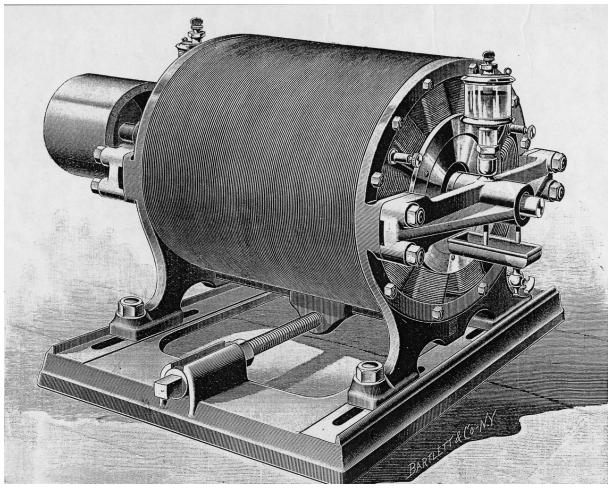

Fig. 4. Nikola Tesla's ac induction motor demonstrated in 1887. Courtesy [20].

patents pertaining to the system in November same year. One of Edison's greatest rivals, George Westinghouse (*Westinghouse Electric Co.*), acquired these patents [22] and with the help of Tesla the *War of Currents* [23], [24] began, with Edison on the dc side, and Westinghouse and Tesla on the ac side.

However, the war of currents put aside, the ac current had the ability to easily be transformed between different voltage levels, without rotating components as was needed for voltage transformation in dc, and could be transmitted at great distances by transforming the voltage to appropriate levels at relative low cost. The first long distance ac transmission in the world (12 miles, 4,000V) was realized in 1890 when Willamette Falls Electric company installed ac generators from Westinghouse while Edison struggled with the fundamental problem of line losses, founded on Ohm's law. The ac distribution had also, at the same time, been installed in Europe, and one example was the long-distance transmission in 1891 from Lauffen to Frankfurt am Main (100 miles) using three-phase ac at 25,000V [25]. An often missing part of the history of ac is the Hungarian research team consisting of the scientists Kàroly Zipernowsky, Ottò Blàthy and Miksa Déri, *ZBD*, who invented the closed core shunt connected ac transformer in 1884, revolutionized the grid using parallel connections (instead of series connections) to a main distribution line, and also electrified the Italian city of Rome in 1886. Westinghouse adopted much of the Hungarian scientists' work to take up the fight with Edison's dc systems [26], [27]. Not only had the ac inventions had an effect on the mainland power generation and distribution grids, but the inventions also gave support to more advanced use of electricity in ships.

In 1896, the US's *Brooklyn* was fitted with electrically operated gun mount elevators and subsequent ships were fitted with electrically operated deck machinery such as winches and cranes powered by 80 volt direct current systems [4]. It should be noted that, despite the success of the alternating current generation and transmission systems in both Europe and the United States, direct current continued to play a major role in land based power systems. There were a variety of reasons, the primary issue that of power factor. The early alternating current systems suffered substantial losses in the form of "reactive power" consumed by the magnetic fields of ac motors and transformers [5].

The percentage of useful power delivered by an alternating current system was and is known as the "power factor." In some early land systems that was as low as 80 or less. That situation led the legendary electrical engineer and mathematician Charles Steinmetz to favor the installation of direct current distribution wherever the load was sufficiently dense to justify the expense of the conversion substations that were required if a system were to reap the benefits of the large scale power generation and transmission that were attainable only with alternating current. Thus ac generation and transmission coupled to direct current distribution by mechanical conversion in substations was the norm in US cities and elsewhere until the 1920s. By that time, the expense entailed in large scale conversion combined with new developments in alternating current distribution and of steel with superior magnetic characteristics forced a change. The largest such system was the *New York Edison Co.* distribution system that supplied 90 percent of the utility power in Manhattan which grew to comprise a total of 41 substations in over 60 structures with a total of 282 mechanical converters before a change to alternating current was initiated in 1928. Elements of the old system remained in place however until late 2007 [5].

While the practices of urban power distribution do not translate directly to shipboard practice, some of the same concerns persist. For example, the direct current motor of the early 20th century still offered superior control of varying loads compared to ac motors. Power factor management was still an issue. The operation of large scale alternating current systems presented the need for synchronization of generators and certain types of motors. Still, the US, like the urban electrical utilities, began a change in favor of alternating current and began the use of three phase ac in 1932. Direct current control systems were larger and heavier; dc motors were more complex to construct. Alternating current was not a perfect solution; in an effort to reduce weight frequencies as high as 400 Hz were utilized but required mechanical converters in an era prior to the development of modern solid state equipment. It is said that was the reason that the British Navy retained direct current systems, although Germany followed the lead of the US with alternating current systems in the 1930s [4].

B. The Early Turbo-Electric Surface Vessels

During the last quarter of the 19th century, marine vessels with steam engines instead of sails as the primary propulsion became more common. In this period the shipbuilders experimented and fitted new vessels with many new technologies. The early propulsion systems were based on reciprocating steam engines, and with the advent of the steam turbines the ship's propellers were initially coupled directly to the prime movers (high-speed), often with poor results. As a result, in the early 1900s, technologies such as marine reduction gears and electric propulsion systems were developed to improve the

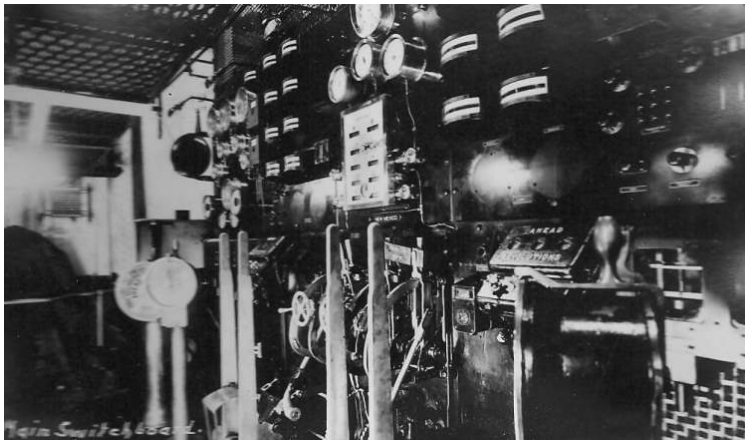

(a) *USS New Mexico*'s main switchboard and control station. Change of speed and direction was done with manual levers. Courtesy [28].

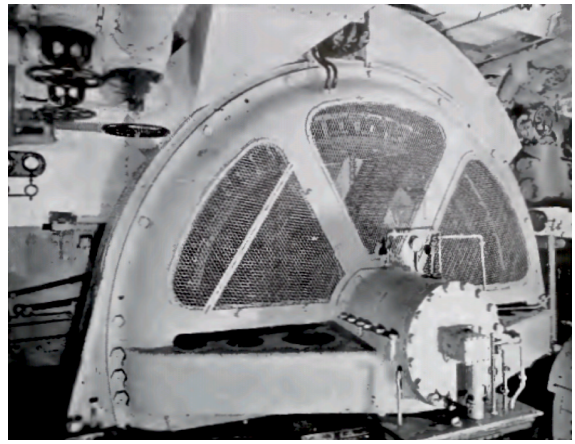

(b) *Cuba*'s 3,000 horsepower, 1,150 volt, 1,180 ampere electric propulsion motor. Courtesy [29], [30].

Fig. 5. *USS New Mexico* was one of the first US vessels with turbo-electric propulsion. *Cuba* was the first passenger vessel in the world with turbo-electric propulsion.

propulsion system powered by the high-speed steam turbine prime movers. The United Kingdom was developing and perfecting mechanical-drive system employing reduction gears, while the United States focused on electric-drive systems [14], [31]. In 1908 the first merchant vessel *Joseph Medill* (a fire-boat) was built with a turbo-electric (dc) propulsion (400 shaft horsepower (shp)) [1], [32].

The first naval vessel with electric propulsion in USA was the collier *USS Jupiter*[2] in 1912. The collier was an experiment including both diesel engine propulsion, turbo-electric propulsion [36], [1] and direct coupled steam turbine propulsion (twin-screws). The *USS Jupiter* was a successful experiment, with its 3,500 horsepower (hp) *General Electric* turbo-electric propulsion system, which made headlines in the New York Times in the 3rd October 1909 issue [37], and the US decided to fit all the front-line battleships with the same propulsion system. Three *New Mexico* class battleships powered by turbines were ordered in 1914, but while under construction it was decided that the lead ship, *USS New Mexico*, should be equipped with turbo-electric drive system and be the first vessel to convert to turbo-electric propulsion [28].

The *New Mexico* used two 11.5MW, 3,000V/4,242V dual voltage, variable frequency ac generators that powered four 7,500hp 24-/36-pole induction motors [14], and was able to maintain a speed of 21 knots [38]. The vessel also had six 300kW auxiliary turbo-generators for lighting and non-propulsion electrical machinery [28]. The *USS New Mexico*'s main switchboard is shown in figure 5a. It is important to note that there were no power electronics in the early 1910s, hence, the vessel's speed was controlled through a complex combination of varying the frequency (speed), voltage of the generator sets and changes in pole configuration. The turbo-electric propulsion was a very effective system with a number of benefits. The shaft alley onboard a turbo-electric vessel was much shorter, and less of a target, than a typical steam-

[2] *USS Jupiter* was from 1920-'22 converted to the first aircraft carrier in the US and renamed *USS Langley* [14], [33], [34], [35]

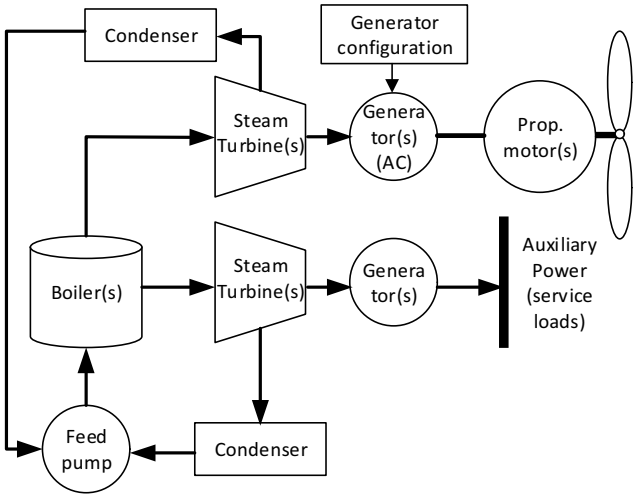

Fig. 6. Simplified drawing of the turbo-electric generation and distribution system installed in *USS New Mexico*, based on written description [14], [38].

powered vessel [35]. The fuel economy was also substantially improved, and the electric motor was faster to reverse because there wasn't need for rerouting steam through a separate turbine. All the benefits, however, came at the cost of weight, since the electric motor weighed considerably more than a reduction gear and a longer shaft. Figure 6 shows a simplified drawing of the *USS New Mexico*'s turbo-electric generation and distribution system, illustrating integration on the steam side of the system.

The passenger vessel *Cuba*, originally built in 1894 as *SS Yorktown*, after being sold and renamed a couple of times, was wrecked in 1916 and rebuilt with turbo-electric propulsion in 1919 and was then the world's first passenger vessel with that propulsion system [29], [30]. Figure 5b shows the *Cuba's* electric propulsion motor. The use of turbo-electric propulsion was not only taking place in the United States. In Europe the Swedish enterprise *Rederiaktiebolaget Svea*, which was located in Stockholm, started equipping ships, that had steam machinery, with turbo-electric propulsion. In 1916, in the

same period *USS New Mexico* was equipped with the new propulsion system, *Rederiaktiebolaget Svea* built two sister ships, *Mjölner* and *Mimer* (cargo ships). *Mimer* was fitted with triple-expansion engines while *Mjölner* got two Ljungström radial-flow reaction turbines, invented by the Swedish engineer Fredrik Ljungström and patented in 1894 [39], driving electric generators [40]. The total power output from the turbines running at 9,200 revolutions per minute (rpm) was 800kW, with a voltage level of 500V. Two induction motors, one on each side, were running at 900rpm and drove the single propeller shaft through single-reduction gearing at 90rpm. The first turbo-electric ship constructed in Great Britain was the cargo ship *SS Wulsty Castle* in 1918, which used the same type of machinery.

The steam-engine was a well adapted solution to generate electricity, however due to the fact that as much as 90% of fuel's energy was wasted on heat, the oil industry was in search for a more economical engine solution fueled on oil. The solution came with Rudolf Diesel, a German inventor and mechanical engineer, which developed the diesel engine (patented in 1892) [41], [42]. Diesel marketed the technology to oil industries all around the world, and granted Emanuel Nobel exclusive licenses to build his engine in Sweden and Russia [43]. In 1902 it was suggested to install diesel engines in the river barges to transport oil from the lower Volga to Saint Petersburg and Finland, and in 1903 the vessel *Vandal* was launched, which was the first vessel equipped with the new diesel engine technology, in addition to being the first vessel featuring diesel-electric propulsion. The vessel's power plant consisted of three 3-cylinder 120hp diesel engines which ran at constant 240 rpm. The electrical transmission was controlled by a tram-like lever which varied the propeller (three screws) speed from 30 to 300 rpm [44], [1]. Even though the Russian river tanker *Vandal* was also the first vessel equipped with a fully functional diesel-electric transmission [45], the use of diesel-electric systems didn't catch on until the entry of the World War I submarines.

Another vessel that can be mentioned is the passenger vessel *Electric Arc* built in 1908 as an experiment with alternating current. The vessel, which probably was the first experimental vessel with ac, originally featured a gas engine that was replaced by a petrol engine (45bhp, 700rpm) driving the alternator (4- and 6-poles winding). This vessel illustrated that electric drive with ac was possible, and was followed by the cargo vessel *Tynemount* in 1913 with diesel-electric ac propulsion. Two diesels of 300hp running at 400rpm; the port side diesel drove a 6-pole alternator and its shunt-wound exciter, and the starboard diesel drove a generator which was wound for eight poles [1]. The electrical system worked well for light loads, however, the propeller pitch was too coarse and required more power than the generators were able to supply, resulting in a breakdown of the engines.

C. The Early Submarines

Marine electrical installations gave, in many cases, a foundation of new-thinking and innovation. In addition to new propulsion systems, the marine power grid made it possible to supply a *service load*, including new navigation- and communication systems as well as light systems. Naval vessels were also equipped with more advanced and precise weapon systems than before, powered by the vessels' power generating units. In the wake of the surface vessels' success using electric systems, and with the advent of the battery (voltiac cell), which was introduced in the early 1800s by Alessandro Volta [46], [47] and developed further for practical use, the innovations also found their way to submarines. The French Navy was considered to be the most enthusiastic advocate for submarines in the late 1800s, and in 1863 the French Navy launched the very first submarine that did not rely on human power for propulsion. The submarine, 140 feet long, 20 feet wide and displacing 400 tons, was designed by Charles Brun and Simèon Bourgeois and named *Le Plongeur*[3]. The propulsion system consisted of a 80 horsepower direct-drive engine run by 180 psi compressed air stored in tanks throughout the vessel [48], [49], and the buoyancy was controlled by regulating the vessel's inner volume by pistons running in and out of the hull. Even though the submarine was state of the art at that time, it was difficult to maneuver, and movements of the crew could send the vessel into severe roll motions. Due to its ineffectiveness the *Plongeour* was set aside.

During the 1880s a lot of inventors around the world were caught up developing the submarine and make it reliable and commercial available. In 1885 the American inventor Josiah H. L. Tuck made a submarine, named *Peacemaker*, which used a chemical (fire-less) boiler with 1500 pounds of caustic soda to generate steam to its engine and provide five hours endurance (turbo-electric). However, his days of innovation came to an end when his relatives had him committed to an asylum for insanity [49], [50]. The same year, the French designer Claude Goubet started his demonstration of electric propelled submarines by building two small private venture vessels, *Goubet I* in 1885 and *Goubet II* in 1889. Both vessels showcased the benefits of electric propulsion, but were otherwise unsuccessful regarding maneuverability. In 1886 the submarine *Nautilus* was built in Tilbury with two electrical motored twin-screws. In 1888 the *Gymnote* (59 feet long, displacing 30 tons) was built with a 50hp motor resulting in a speed of about 7 knots [1]. From this point on, electric propulsion came to be the common factor between the different submarine designs, as solutions involving compressed air and compressed steam did not provide the necessary response to achieve the needed maneuverability when diving.

In the late 1890 and the early 1900s many nations were occupied by making their own naval submarines for warfare with a range of different weapon system designs, including torpedoes, air cannons, and large calibre guns. The French Navy was independently developing its own submarine, while the Royal Navy and the US based much of their work on John Phillip Holland's prototypes. Holland, originally a school teacher, made different submarine prototypes involving combustion engines for surface use and batteries for diving operations. Holland also challenged the original designs to overcome the stability and maneuverability problems with

[3]Meaning "*The diver*" in French.

the solution of a small net positive buoyancy, ballast tanks and diving planes [49]. The use of combustion engines to charge the battery proved to be a valid option, as turbo-electric systems required the submarine to come to a stop before submerging, which made dive operations slow. Even after the steam-plants had been shut down, the power system retained a lot of heat, which made the climate within the submarine almost unbearable. In addition, when surfacing, starting the steam plant was a slow process, due to the fact that the boilers had to be reheated. In the early 1900s almost everyone had adopted the idea of using combustion engines to charge the batteries. Both gasoline and pre-diesel internal combustion engines were used, and a lot of research was directed towards engine construction, including both 2- and 4-cycle (stroke) engines with different number of cylinders. The German Navy used a *MAN* 4-cycle diesel, with 850-1,000 brake horsepower (bhp), which powered nearly all World War I submarines. Initially, the US used the 4-cycle *Vickers* diesel engine, either 4-cylinder 275bhp or 6-cylinder 300bhp, which was built by *Electric Boat* closely associated with *Vickers* and completed at the *New London Shop and Engine Company* (NELSECO). Also in Sweden, around 1913, the Swedish firm *Polar* begun to manufacture 4-cycle submarine engines [51]. Although a lot of effort was directed towards the engines and propulsion systems, no one had solved the problem restricting the duration of dive operations due to limited oxygen supply. The engines could not be run underwater to charge the batteries, and the crew needed fresh, breathable air.

III. Effects of World War I and II

After the end of World War I, a naval arms race was led by the US, Great Britain and Japan, where the three nations all commenced large-scale capital ship efforts [14]. This arms race was unfortunate, increasing the possibility for another war. Between 1921 and 1922 the world's nine largest naval powers were gathered for a conference in Washington D.C., invited by the US Secretary of State, Charles Evans Hughes, to discuss naval disarmament and solutions to relieve the growing tensions in East Asia [52]. Great Britain, Japan, France and Italy were invited to the conference in effort to reduce the naval capacity, while Belgium, China, Portugal and the Netherlands were invited to join in discussions on the tense situation in the Far East. The results from the Washington Naval Conference were three major treaties; the *Five-Power Treaty*, the *Four-Power Treaty* and the *Nine-Power Treaty*, all commonly known as part of the *Washington Treaty*. The cornerstone of the naval disarmament program, in effort to ending the arms race, was the *Five-Power Treaty*, involving the US, Great Britain, Japan, France and Italy. The politics put aside, the *Five-Power Treaty* gave strict regulations for each of the countries involved to maintain a number and size limits (set ratio of warship tonnage) on capital ships. In addition, the treaty also spelled the end of turbo-electric propulsion for war ships by prohibiting the reconstruction of ships [35], meaning a cancellation of any plans to rebuild existing US battleships with turbo-electric drives, and also prohibiting construction of new naval vessels[4][5]. From this point on, most of the existing US vessels were powered by geared turbines.

As the treaty covered only naval vessels, the development of turbo-electric propulsion continued, but was not, however, used for naval surface vessels. Geared steam-turbine propulsion became predominant for large warships, however, electric propulsion was still being used, especially for passenger vessels and ice breakers with separate power systems supplying the propulsion loads and the ship's service loads.

In 1930 a new naval conference was held in London, with the effort to extend the *Washington Treaty*. The participating nations were the US, Great Britain, France, Italy and Japan. The result from the conference was the *Treaty for the Limitation and Reduction of Naval Armament*, commonly known as the *London Naval Treaty*, which regulated submarine warfare and limited naval shipbuilding by extending the *Washington Treaty*'s building holiday another five years [57]. The treaty was signed by all five nations, despite Japan's growing overseas ambitions which, in secret, exceeded the treaty's limits on improvements and refitting of some of the nation's battleships [53]. The *Second London Naval Disarmament Conference* was held in 1935-1936 in effort to limit growth in naval armaments. The following treaty, the *Second London Naval treaty*, limited the maximum size of the participating nation's ships and the maximum calibre on the guns they could carry. The treaty also included an "escalator" clause that allowed the members to match tonnage and armament increases by nonmembers. However, an agreement on a maximum allowed number of warships was prevented. The reason being Japan's withdrawal from the treaty after refusing to continue with the quantitative "ratio" system of limitation which had existed since 1922 [58]. Japan, which had interest in expanding the empire into East-Asia and China, proposed parity among the three major naval powers, with no restrictions on the type of warships allowed. This was in short rejected by the US and Great Britain, fearing to lose naval superiority over Japan which would cede Asia to Japan and threaten the security of Australia, New Zealand and the Philippines [33].

After Japan abrogated the treaty, after giving a two-year notice in 1934 refusing to renew the existing treaty, the naval construction and arms race ensued and the US began to design and build new battleships. However, the battleship designs of the late 1930s did not feature turbo-electric propulsion systems despite its advantages. A major reason being vulnerability to electrical short-circuits that could result from battle damage increasing the likelihood to be knocked out of operation - *survivability* - and added weight which could instead be used more wisely, i.e. to carry more guns and armor.

In fact no other nations at that time had naval surface vessels with turbo-electric propulsion [53]. Germany originally had plans to use turbo-electric drives in the battleships of the *Bismarck* class, however, *Siemens-Schuckert Werke* in Berlin did not accept the contract because of a fear that it could not meet certain technical requirements. Hence, the battleships of

[4]Sometimes referred to as the *treaty's building holiday* [53].

[5]All battleships and cruisers retained under the treaty were allowed the addition of 3,000 tons for providing means of defence against air and submarine attacks [54].

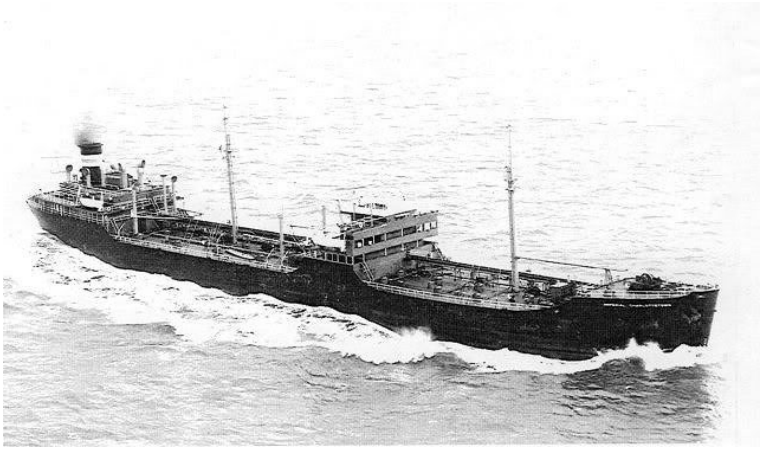

(a) The *Sag Harbor*, built for USMC by the *Sun Shipbuilding and Dry Dock Company* in 1944. Courtesy [55].

(b) *USS K-5* (built 1914) underway on the Mississippi River, 1919. The vessel was built by the *Fore River Shipbuilding* and launched 17 March 1914. Courtesy [56].

Fig. 7. World War vessels, the T2 tanker (World War II) and the USS K-5 submarine (World War I), both with electric propulsion.

the *Bismarck* class were built with reduction-gear systems [33], [59].

A. "The Navy Oilers"

One of the more important vessels using turbo-electric propulsion built during World War II was the T2 tanker. The T2 tankers, see figure 7a, ("navy oilers") were crucial for maintaining the upper hand in the war by transporting oil to the navy vessels around the world. The most common type of the T2 tanker was the United States Maritime Commission type T2-SE-A1, which was overall 523.5 feet long, with a beam of 68 feet [60]. Between 1942 and 1945 481 tankers of this type were built, with propulsion provided by a turbo-electric drive [61], [62]. The propulsion system consisted of a steam-turbine generator connected to a propulsion motor to drive the propeller, hence, the need for a large main reduction gear was obviated. At this time the turbo-electric propulsion system was not a new invention, as all the capacity to manufacture reduction gears was committed to supplying the naval fleet, the use of turbo-electric propulsion was a natural choice resulting in an average production time from laying the keel to sea trials to about 70 days. The T2 (A1 type) tanker's propulsion system delivered 6,000shp , with a maximum power of 7,240hp resulting in a rated top speed of about 15 knots with a cruising range of about 12,600 miles.

B. Submarines using Diesel-Electric Systems

During World War I the submarines proved to have a significant impact, as the German Navy's submarines (u-boats) saw action in the war on Allied commerce, often referred to as the *Handelskrieg*. In this period, the battery technology and diesel-electric systems were primitive, and the submarines were designed to be more of a surface vessel with the ability to dive when needed. The submarine design included more or less a triangular cross section of the hull with a distinctive keel and bow, like the USS K-5 shown in figure 7b. The propulsion system consisted of a diesel-electric system to charge the main

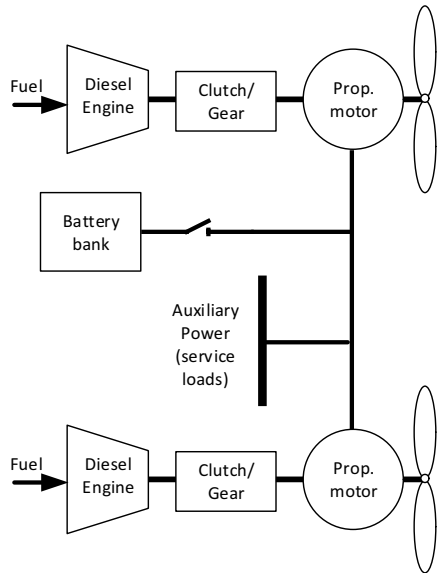

Fig. 8. Simplified drawing of a common diesel-electric configuration in World War I and II submarines. Propulsion motors acted as generators driven by diesel engines on surface.

batteries (lead batteries) on the surface using the propulsion motors as generators. The batteries were solely used during submerged operations for both propulsion and service loads such as lights and instrumentation. Figure 8 shows a simplified sketch of such a configuration. The maximum duration of underwater operations was heavily dependent on the vessel's speed. At a very slow speed of about 2 knots, the vessel could be submerged for around 48 hours, while at a higher speed, about 6-8 knots, the vessel could only be submerged for around an hour [63]. World War I was the first war using submarines, and is often referred to as *The Submarine War*.

When World War II broke loose, a lot of research had been conducted towards the diesel engine, the electric motor and battery technology. Even though the *Versailles Treaty* (1919), among other things, banned Germany from having submarines

(and air force) [64], the German Navy, *Kriegsmarine*, started constructing submarines in the early 1930s. To increase the duration of submersed operations a German engineer, Dr. Helmut Walter of Kiel's *Germaniawerft*, proposed a radical new technology for providing oxygen to the submarine's engine whilst submerged. Using high-purity hydrogen peroxide (H_2O_2) as an oxidant, the oxidant was decomposed using a permanganate catalyst to yield high temperature steam and free oxygen. This oxygen was then injected into the diesel engines, enabling the diesel engines to run underwater and charge the batteries. The exhaust from the engines and the steam from the oxygen production were ejected. Dr. Walter made a prototype, which was scaled by the *Kriegsmarine*. Although seven Type XVIIB H202 vessels were built, they never saw combat due to Germany's defeat in 1945. In the 1950s Great Britain, with the help of Dr. Walter and some of his key personnel, created two high speed boats, *HMS Explorer* and *HMS Excalibur*. However, the highly concentrated hydrogen peroxide fuel created a safety hazard, and the vessels were decommissioned in the 1960s. This was not the end for Dr. Walter's technology as both the US and the Soviet Union adopted his technology, and started research on Air-Independent Propulsion (AIP) systems [65]. The research on AIP systems started by Dr. Walter is still an important research topic in the sense of electric power generation for underwater vehicles, including, among others, closed-cycle diesel engines [66], [67], [68], closed-cycle gas and steam turbines [69], [70], [71], Stirling-cycle (adiabatic) heat engines [72], [73] and fuel cells [74], [75], and a range of different patents are filed within the topic.

IV. Towards Today's Marine Vessel Power Systems

After World War II and toward present time, new innovations and stringent requirements with regards to fuel efficiency, reliability, maneuverability (variable speed propulsion) and air pollution (emissions) led the way towards today's marine vessel power system solutions. With an increasing need for electricity, as a result of more electrical loads with different power requirements (i.e. voltage levels, dc/ac, etc.) the technical advances in power electronics found their way to the shipboard power system, with the result of the marine vessel power system slowly converting towards an All Electric Ship (AES).

A. The Advent of Power Electronics and Variable Speed Converters

The next technological advance paving the way for the modern marine vessel's power systems may be seen as the advent of modern power electronics. The history of power electronics started with the American inventor Peter Cooper Hewitt, who in 1902 invented the glass-bulb pool-cathode mercury arc rectifier [76], as a result of experiments with a mercury vapor lamp which showed the current flowed in only one direction, from anode to cathode, giving rectifying action. His invention was quickly adopted by the industry, finding its way to applications in battery charging and electrochemical processes. The technology was also adapted in power grid control, and by retarding the firing angles, the rectifier circuit could also be operated as a line-commutated inverter. In 1926 *General Electric* invented the thyratron, or hot-cathode glass bulb gas tube rectifier, which was the forefather to the thyristor. In 1934 the thyratron was used in a motor drive for speed control of induced draft fans in the *Logan Power Station*, which was the first variable-frequency ac installation in history. The diode version of the thyratron, the phanotron, was used in the *Kramer* drive in 1938, where the phanotron bridge replaced the rotary converter for slip power rectification. In 1947 the bipolar point contact transistor was invented by Bardeen and Brattain followed by the bipolar junction transistor (BJT) in 1948 by Shockley, all working in *Bell Telephone Laboratory*. The same laboratory also invented the PNPN triggering transistor in 1956, which later was defined as a thyristor or silicon controlled rectifier (SCR), and in 1958 *General Electric* introduced a commercial thyristor, including the TRIAC (integrated anti-parallel thyristor) and the gate turn-off thyristor (GTO). The invention of the thyristor marked the beginning of the modern era of power electronics, often referred to as *the modern solid-state power electronics revolution* [77], [78], [79], [80]. In the late 1970s power MOSFETs became commercially available, and in 1985 the Insulated Gate Bipolar Transistor (IGBT) was commercially introduced by *General Electric*. The IGBT is basically a hybrid MOS-gated turn on/off bipolar transistor that combines the properties of MOSFET, BJT and the thyristor [81].

From the early power electronic inventions a range of different devices were made to convert, transform and do frequency adjustments to gain effective and economical power distribution systems. The *SS Canberra*, launched in 1960, was the first British passenger liner to use alternating current as power. The vessel was originally an ocean liner, intended to sail between the United Kingdom and Australia (*The Orient Line*). However, due to the arrival of jet airlines, the vessel was adapted to cruising. The vessel was equipped with two *British Thomson-Houston* (AEI[6]) synchronous three-phase 6,000V air-cooled electric motors providing 85,000hp (63,000kW) running twin screws, which were the most powerful turbo-electric powered units ever installed in a passenger ship, giving the vessel a speed of about 27.5 knots. The two electric motors were supplied by two 32,200kW steam-turbine driven alternators. In addition, the vessel was equipped with four steam-turbines providing auxiliary power, each driving a 1,500kW, 440V, three-phase, 60Hz alternator and a tandem driven 300kW exciter for the main propulsion alternators. In addition to the twin screws, the vessel was equipped with a bow propeller to make the maneuvering in port and docking easier [82], [83], [84]. *SS Canberra* is considered a legend, having an important role in the Falklands war starting in 1982 [85], but was scrapped in 1997 due to high running costs and age. The power system installed in *SS Canberra* was state of the art, with separated power generation for main propulsion and service loads (auxiliary power), and still today many vessels use this kind of separated power generation.

From approximately 1980 the use of power electronics in

[6]*Associated Electrical Industries*

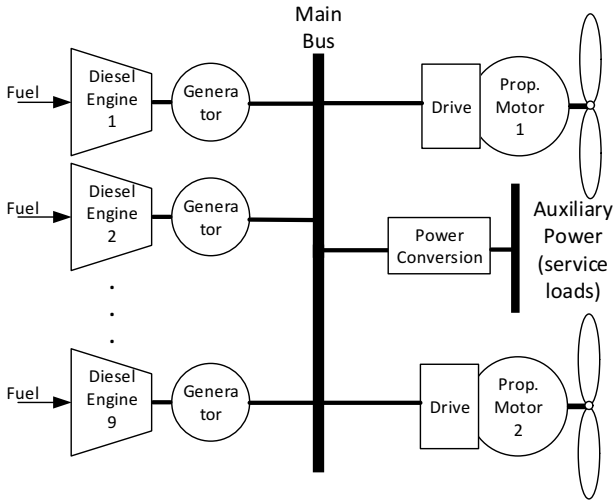

Fig. 9. Simplified drawing of *RMS Queen Elizabeth 2*'s integrated diesel-electric power grid.

vessel's propulsion systems became a very common method for improving fuel efficiency [86], [87]. A high-profile example is the ocean liner *Queen Elizabeth 2* (QE2), which was built in 1968 for *Cunard Line*, originally steam powered. After experiencing mechanical problems in 1983, and an electrical fire in 1984, *Cunard* decided to convert her from steam to diesel. The conversion to diesel-electric propulsion would improve the fuel efficiency and was expected to save *Cunard* £12 million a year in fuel costs [88]. The vessel was fitted with 9 German *MAN B&W 9L58/64* 9-cylinder engines, each weighting about 120 tons, all connected in a diesel-electric configuration, each driving a generator rated 10.5MW at 10kV [89]. The electrical plant, in addition to powering the vessel's auxiliary loads (and hotel services) through transformers, drove two synchronous salient-pole 44MW *GEC*[7] propulsion motors (each weighting more than 400 tons), which, one on each propeller shaft, drove two five-bladed variable-pitch propellers. A simplified drawing of the ship's electric configuration is given in figure 9. The vessel's service speed of 28.5 knots could be maintained using only 7 of the diesel-electric sets. At this speed the fuel savings were about 35% compared to the old machinery. The maximum power output from the power plant was 130,000hp, in comparison with the old machinery's 110,000hp. The vessel is still functional today, laying in Dubai after plans for it to become a luxury hotel in Asia stalled [90].

B. Towards All Electric Ships (AES)

Not only did passenger and cruise vessels convert to diesel-electric systems. Also offshore vessels such as Platform Supply Vessels (PSV), anchor handling and a range of special vessels adopted a diesel-electric configuration in the 1980s. Due to an increase in electric equipment and systems used for different operational profiles - a transition towards All Electric Ships (AES) [91], the vessels needed reliable power generation which could supply the often rapidly varying load profiles. Also the introduction of Dynamic Positioning (DP) systems, in which interest started to grow with the offshore drilling in the 1960s when drilling moved to deeper waters where jack-up barges could no longer be used, added requirements for the power systems. The DP system was originally designed for station keeping, which today has been further developed to include a number of different features and functionality [92], [93]. The DP system requires a fast acting power system that can supply the propulsion system's load profile to keep the vessel at the desired coordinates. In addition to DP systems, the advent of different thruster designs, such as azimuth (azipod) and bow thrusters, all increasing the vessel's maneuverability, changed the load profile of a vessel and required its power system to be able to supply the necessary load profiles in relatively different operations while keeping the fuel consumption at a minimum. With the advent of modern power electronics, and the application of the thyristor to power control in the 1970s, new systems and electrical equipment could be powered, and the power generation in a diesel-electric configuration could be realized with high efficiency and at appropriate safety levels. In vessels, such as the PSVs and naval vessels, the power system had to include more than one primary mover to generate power to the propulsion system, and due to limited space, maximum weight limits and high reliability requirements the power system design changed from a radial to a zonal design.

Although diesel-electric power generation can be considered to be the most common system in today's shipboard power grids, there exist other solutions using alternative fuel. Prime movers using Liquid Natural Gas (LNG) and nuclear steam-turbine plants (turbo-electric or geared configuration) have both been explored and used, LNG for reducing air pollution and nuclear as more or less an *infinite* power source cultivating AIP:

- *USS Nautilus* was the first nuclear-powered submarine, commissioned in 1954 (cold war submarine) [95], [96].
- *USS Long Beach* was the first nuclear-powered navy surface vessel, launched in 1959 [96].
- *NS Savannah* was the first nuclear-powered merchant (passenger-cargo) vessel, launched in 1959 [97], [98].
- *MF Glutra* was the first LNG-powered vessel in the world. The ferry was set in operation in 2000 [99].
- *Viking Energy* and *Stril Pioner* were the first LNG-powered cargo vessels, both launched in 2003 [100], [101], [102].
- *Isla Bella* was the first LNG-powered container ship, launched in 2015 [103].

For economical reasons, some vessels, with varying operational modes and propulsion load profiles, have adopted a Hybrid Electric Drive (HED) system (sometimes referred to as the *power take-in/power takeoff architecture* [14]), which adds a propulsion motor to the gearbox of a mechanical drive propulsion system. This is done to allow the electrical distribution system to power the propulsion system at low speed. Mechanical propulsion engines are in general least effective at low speed, and by using the electric propulsion

[7] *General Electric Company*

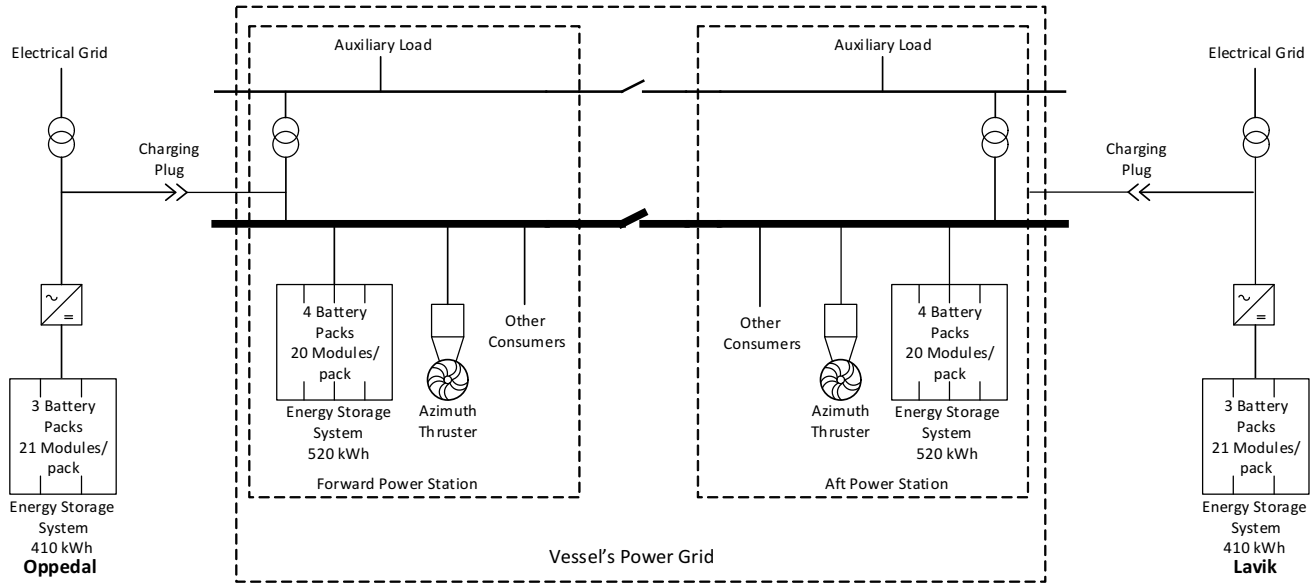

Fig. 10. Simplified one-line diagram of *Norled*'s *MF Ampere* all electric battery ferry [94]. Each side of the ferry's crossing contains an energy storage system, which is charged while the vessel is at sea, to not overload the village's electrical grid when the ferry is charging its batteries.

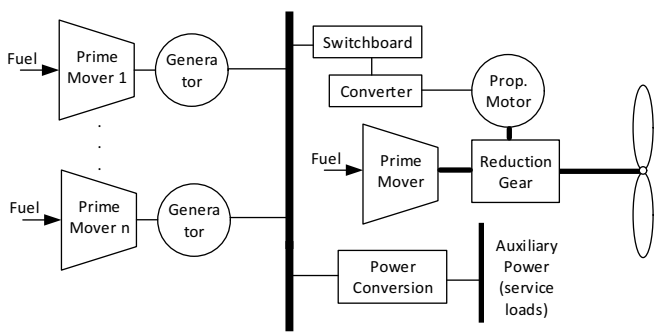

Fig. 11. Simplified drawing of a hybrid grid. Diesel-electric propulsion is used for low speeds while the prime mover is used for high speeds [14].

a considerable amount of fuel can be saved while operating at low speed (low propulsion power demand) [104]. An example of a vessel using a HED system is the *USS Makin Island*, a *Wasp*-class amphibious assault ship, which was commissioned in 2009. The ship is equipped with two 35,000shp gas-turbines (*General Electric*) and six 4,000kW diesel generators (*Fairbanks Morse*). The vessel uses two auxiliary propulsion motors powered by the ship's electrical grid (diesel-electric) at low speed (up to 12 knots), while at higher speeds the gas-turbines are used [105], [106]. Since such amphibious ships spend about 75% of the time at speeds lower or equal to 12 knots, the diesel-electric propulsion is used a majority of the time, saving both fuel and wear and tear on the vessel's primary engines. Figure 11 shows a simplified drawing of such a hybrid system, where a mechanical engine and an electric propulsion motor are both connected to the gearbox driving the propeller shaft.

New technologies such as fuel-cells and Battery Energy Storage Systems (BESS) using renewable energy have also been explored. In January 2015 the world's first fully electric battery powered passenger and car ferry, *MF Ampere*, was set in operation (commissioned and delivered October 2014) in Norway. The vessel was a joint development between the Norwegian ferry company *Norled AS*, the shipyard *Fjellstrand* and *Siemens AS*. The vessel, which was certified by *DNV-GL*, is powered by a lightweight *Corvus* Energy Storage System (ESS), weighting only 20 metric tons, and supplies all the vessel's power demands while at sea [94], [107]. The vessel, which is 80 meters long, can carry 120 cars and 360 passengers, and the ferry's crossing, which goes between Oppedal and Lavik, near Bergen, Norway, takes about 30 minutes. The ship's batteries, which are approximately 1MW combined, are charged on each side of the route using the villages' electric grids, which distribute hydro-generated power. Due to fast charging and to avoid overloading the electrical grids in the villages, the charging systems contain battery packs (battery energy storage systems), which are charged by the villages' electrical grid while the vessel is at sea. The vessel's hull is optimized to be energy effective, and each port is equipped with a docking system which uses vacuum mounts to keep the ferry at rest without using the vessel's propulsion. Figure 10 shows a simplified one-line diagram of the ferry's power system.

The implementation of ECA (Emission Controlled Area) zones at different areas along coastlines defines a set of strict requirements for acceptable emission levels from diesel engines, and in this way pushing the development of shipboard power systems towards more environmental friendly solutions. IMO is defining the standard for emissions in the ECA zones by the *MARPOL Annex VI*, which make designers and engine manufacturers look into improving performance of engines and the way they operate in a power system. The focus on improving the solutions by reduction of losses and best possible utilization of the generated power has introduced centralized and distributed dc solutions as presented by

Siemens (*BueDrive-PlusC*) [108] and *ABB* (*DC-grid*) [109]. This development is in line with an increasing demand for batteries as part of power system solutions for ships in order to meet the emission requirements, and has also made class societies, such as *DNV-GL*, develop new rules for use of large battery systems in ships, as was done for the *Ampere* ferry.

V. Conclusion

The evolution of the development of marine vessels, from the earliest introduction of electricity in commercial vessels with the *SS Columbia* in the 1880 to the new era of the all electric ship marked by the *Ampere* ferry, has been presented in this paper. The use of electricity in marine vessels which started far from the idea of an electric power system on board, has however spurred the developments of electric propulsion systems, and the concept of the integrated power system. As new needs arose (raising cost of fuels and need for improved fuel efficiency) and new inventions emerged, electricity moved from illumination to propulsion systems and energy storage, gradually shaping the emergence of an electric power grid within the marine vessel. The evolution of the marine vessel electrical power system, in this way shaped also the evolution of several electrical technologies, that were customized for use in vessels. And the move appears likely to continue as the Ampere example shows, towards fully electric ships with compact electric components, far from the solution but not from the idea of the first experiment of DC electric boat by von Jakobi. More than 150 years after this first experiment, and through a trajectory of diverse technological developments, the concept of fully electrically driven ships seems to not have gone forgotten.

Acknowledgment

This work has been carried out at the Centre for Autonomous Marine Operations and Systems (AMOS). The Norwegian Research Council is acknowledged as the main sponsor of AMOS. This work was supported by Ulstein Power & Control AS and the Research Council of Norway, Project number 241205.

References

[1] L. Horne, *Electric propulsion of ships*. North East Coast Institution of Engineers and Shipbuilders, 1939.

[2] saint-petersburg.com, "Moritz Hermann von Jacobi," http://www.saint-petersburg.com/famous-people/moritz-hermann-von-jacobi/, accessed: 2015-09-26.

[3] Martin Doppelbauer, "The invention of the electric motor 1800-1854," http://www.saint-petersburg.com/famous-people/moritz-hermann-von-jacobi/, accessed: 2015-09-27.

[4] J. M. Maber, "Electrical Supply in Warships; A brief History," http://www.worldnavalships.com/forums/showthread.php?t=12722, Crown Copyright/MoD (1980), Accessed: 2015-09-26.

[5] J. J. Cunningham, "Manhattan Electric Power Distribution, 1881-1901," *Proceedings of the IEEE*, vol. 103, no. 5, pp. 850–858, 2015.

[6] C. Sulzberger, "First Edison Lights at Sea: The SS Columbia Story, 1880-1907 [history]," *Power and Energy Magazine, IEEE*, vol. 13, no. 1, pp. 92–101, Jan 2015.

[7] *Marine Engineering*. Marine Publishing Company, 1903, no. v. 8.

[8] "Lighting the Steam Ship Columbia with Edison's First Commercial Light Plant," http://www.ieeeghn.org/wiki/images/f/fe/Edison_-_lighting_the_steamship_columbia_with_edisons_first_commercial_light_plant.pdf, accessed: 2015-06-29.

[9] J. Hammarlund, "Oregon's role as an energy innovator: A historical perspective," *Oregon's Future 3 (1), 10.(2002)*, 2002.

[10] "SS Columbia (1880)," https://en.wikipedia.org/wiki/SS_Columbia_(1880), accessed: 2015-06-29.

[11] "Electric Generator," http://edison.rutgers.edu/generator.htm, accessed: 2015-06-29.

[12] "Engineering and Technology History Wiki: Edison's Electric Light and Power System," http://ethw.org/Edison's_Electric_Light_and_Power_System, accessed: 2015-06-29.

[13] "The Columbia," *Scientific American*, vol. 42, no. 21, p. 326, May 1880.

[14] T. McCoy, "Electric Ships Past, Present, and Future [Technology Leaders]," *IEEE Electrification Magazine*, vol. 3, no. 2, pp. 4–11, June 2015.

[15] "History of Electricity," http://www.electricalfacts.com/Neca/Science/electricity/history.shtml, accessed: 2015-06-30.

[16] "Edison vs. Westinghouse: A Shocking Rivalry," http://www.smithsonianmag.com/history/edison-vs-westinghouse-a-shocking-rivalry-102146036/?no-ist, accessed: 2015-07-01.

[17] "The invention of the electric motor 1856-1893," http://www.eti.kit.edu/english/1390.php, accessed: 2015-06-30.

[18] F. Dalzell, *Engineering Invention, Frank J. Sprague and the U.S. Electrical Industry*. MIT Press, 2010.

[19] F. J. Rowsome, *The Birth of Electric Traction, the extraordinary life of inventor Frank Julian Sprague*. IEEE History Center Press, 2013.

[20] "Nikola Tesla Inventor," http://nikolatesla-inventor.com/INVENTIONS/index.html, accessed: 2015-06-30.

[21] P. A. David and J. A. Bunn, "The economics of gateway technologies and network evolution: Lessons from electricity supply history," *Information Economics and Policy*, vol. 3, no. 2, pp. 165 – 202, 1988.

[22] N. Tesla and W. E. . M. Company, *Transmission of Power; Polyphase System: Tesla Patents*. General Books LLC, 1893.

[23] L. Surhone, M. Timpledon, and S. Marseken, *War of Currents: George Westinghouse, Thomas Edison, Direct Current, Electric Power, Alternating Current, Nikola Tesla*. Betascript Publishing, 2010.

[24] T. McNichol, *AC/DC: The Savage Tale of the First Standards War*. Wiley, 2011.

[25] J. Foran, "The Day They Turned The Falls On: The Invention Of The Universal Electrical Power System," http://library.buffalo.edu/projects/cases/niagara.htm, accessed: 2015-07-01.

[26] A. A. Halacsy and G. H. von Fuchs, "Transformer invented 75 years ago," *Electrical Engineering*, vol. 80, no. 6, pp. 404–407, June 1961.

[27] S. Jeszenszky, "Electrostatics and Electrodynamics at Pest University in the id-19th Century," http://ppp.unipv.it/Collana/Pages/Libri/Saggi/Volta%20and%20the%20History%20of%20Electricity/V%26H%20Sect2/V%26H%20175-182.pdf, accessed: 2015-07-01.

[28] "A Glimpse Into BB-40' Early Years," http://www.ussnewmexico.net/old-updates/, accessed: 2015-07-03.

[29] D. Dyal, B. Carpenter, and M. Thomas, *Historical Dictionary of the Spanish American War*, ser. Gale virtual reference library. Greenwood Press, 1996.

[30] "Association of the United States Navy: USS Langley - The Navy's First Carrier," http://www.ausn.org/NewsPublications/NavyMagazine/MagazineArticles/tabid/2170/ID/8239/USS-Langley--The-Navys-First-Carrier.aspx, accessed: 2015-07-03.

[31] "PEO Ships Electric Ships Office: History," http://www.navsea.navy.mil/teamships/PEOS_ElectricShips/ESO_History.aspx, accessed: 2015-06-30.

[32] H. F. Harvey Jr and W. Thau, "Electric propulsion of ships," *American Institute of Electrical Engineers, Transactions of the*, vol. 44, pp. 497–522, 1925.

[33] W. McBride, *Technological Change and the United States Navy, 1865–1945*, ser. Johns Hopkins Studies in the History of Technology. Johns Hopkins University Press, 2000.

[34] "Americas First Aircraft Carrier - USS Langley," http://www.navalhistory.org/2014/03/20/americas-first-aircraft-carrier-uss-langley-cv-1-warfighting-first-platforms-people, accessed: 2015-07-03.

[35] "What Makes a Warship: Engines," http://worldofwarships.com/en/news/common/warship-engines/, accessed: 2015-08-06.

[36] S. Robinson, *Electric Ship Propulsion*. Simmons-Boardman publishing Company, 1922.

[37] "New Invention to Transform Shipbuilding," New York Times, October 3 1909, http://query.nytimes.com/mem/archive-free/pdf?res=980CEEDE143EE033A25750C0A9669D946897D6CF, accessed: 2015-06-30.

[38] "USS New Mexico (BB-40) Association: History," http://bb40ussnewmexico.com/history/, accessed: 2015-07-03.

[39] W. Carter, "The Ljungström System of Electric Drive," *Journal of the American Society for Naval Engineers*, vol. 28, no. 3, pp. 708–728, 1916.

[40] E. Smith, *A short history of naval and marine engineering*. Cambridge University Press; Reissue edition (October 31, 2013), 1938.

[41] A. Chalkley, *Diesel engines for land and marine work*. D. Van Nostrand, 1912.

[42] D. Thomas, *Diesel: Technology and Society in Industrial Germany*. University of Alabama Press, 2004.

[43] R. Tolf, *The Russian Rockefellers: The Saga of the Nobel Family and the Russian Oil Industry*, ser. Hoover Institution publications. Hoover Institution Press, Stanford University, 1976.

[44] H.-J. Reuss, "Trials and tribulations of the marine diesel." *Motor Ship*, vol. 84, no. 1000, pp. 32–33, 2003.

[45] R. Gardiner and A. Greenway, *The Golden Age of Shipping: The Classic Merchant Ship, 1900-1960*, ser. Conway's history of the ship. Conway Maritime Press, 1994.

[46] "March 20, 1800: Volta describes the Electric Battery," http://www.aps.org/publications/apsnews/200603/history.cfm, accessed: 2015-08-11.

[47] "Volta's Life and Works," http://www.alessandrovolta.info/life_and_works_8.html, accessed: 2015-08-11.

[48] "World Submarine History Timeline, Part One: 1580-1869," http://www.submarine-history.com/NOVAone.htm, accessed: 2015-08-11.

[49] P. Fontenoy, *Submarines: An Illustrated History of Their Impact*, ser. Weapons and warfare series. ABC-CLIO, 2007.

[50] "World Submarine History Timeline, Part Two: 1870-1914," http://www.submarine-history.com/NOVAtwo.htm, accessed: 2015-08-11.

[51] N. Friedman, *U.S. Submarines Through 1945: An Illustrated Design History*, ser. Illustrated Design Histories Series. Naval Institute Press, 1995.

[52] "Office of the Historian: The Washington Naval Conference, 19211922," https://history.state.gov/milestones/1921-1936/naval-conference, accessed: 2015-08-06.

[53] S. Sandler, *World War II in the Pacific: An Encyclopedia*, ser. Garland Military History of the United States. Garland Pub., 2001.

[54] T. Hone and T. Hone, *Battle Line: The United States Navy, 1919-1939*. Naval Institute Press, 2006.

[55] T. Wildenberg, "Auke Visser's Other Esso Related Tankers Site," http://www.aukevisser.nl/others/id339.htm, accessed: 2015-08-12.

[56] G. Smith, "World War 1 at Sea: United States Naby," http://www.naval-history.net/WW1NavyUS.htm, accessed: 2015-08-12.

[57] Z. Steiner, *The Lights that Failed: European International History, 1919-1933*, ser. Oxford history of modern Europe. Oxford University Press, 2005.

[58] H. A. Hyde, *Scraps of Paper: The Disarmament Treaties Between the World Wars*. Harlow Andrew Hyde, 1988.

[59] W. H. Garzke and R. O. Dulin, *Battleships: Axis and Neutral Battleships in World War II*. Naval Institute Press, 1985, vol. 3.

[60] "GlobalSecurity: T2-SE-A1 AO-49 Suamico / AO-65 Pecos," http://www.globalsecurity.org/military/systems/ship/t2-tanker.htm, accessed: 2015-08-06.

[61] "A Brief History of the T2 Tanker," http://www.t2tanker.org/t2-history.html, accessed: 2015-08-06.

[62] "The Pacific War Online Encyclopedia: T2-SE-A1 Class, U.S. Tankers," http://pwencycl.kgbudge.com/T/2/T2-SE-A1_class.htm, accessed: 2015-08-06.

[63] "Brief History of Diesel-Electric Submarines," http://www.pmbatteries.com.au/batteries/history-of-diesel-electric-submarines, accessed: 2015-08-12.

[64] "Peace Treaty of Versailles, Articles 159-213: Military, Naval and Air Clauses," http://net.lib.byu.edu/~rdh7/wwi/versa/versa4.html, accessed: 2015-08-12.

[65] E. C. Whitman, "Air-independent propulsion," *Undersea Warfare*, vol. 4, no. 1, p. 1231, 2001.

[66] A. Fowler, "Closed-cycle diesel engine for underwater power," 1984.

[67] ——, "Closed-cycle diesel engines as underwater power generators," *North East Coast Institution of Engineers & Shipbuilders Transactions*, vol. 106, no. 2, 1990.

[68] ——, "Closed cycle diesel propulsion systems," *Institute of Marine Engineers Transactions*, vol. 102, no. Part 2, 1990.

[69] M. J. Gouge, "Closed cycle gas turbine nuclear power plant for submarine propulsion," *Naval engineers journal*, vol. 107, no. 6, pp. 35–41, 1995.

[70] J. Horlock, *Advanced Gas Turbine Cycles: A Brief Review of Power Generation Thermodynamics*. Elsevier Science, 2013.

[71] L.-G. Chen, J.-L. Zheng, F.-R. Sun, and C. Wu, "Power, power density and efficiency optimization for a closed cycle helium turbine nuclear power plant," *Energy Conversion and Management*, vol. 44, no. 15, pp. 2393 – 2401, 2003.

[72] G. Reader, I. Potter, E. Clavelle, and O. Fauvel, "Low power stirling engine for underwater vehicle applications," in *Proceedings of the 1998 International Symposium on Underwater Technology*, Apr 1998, pp. 411–416.

[73] O. Persson, C. Östberg, J. Pagels, and A. Sebastian, "Air contaminants in a submarine equipped with air independent propulsion," *Journal of Environmental Monitoring*, vol. 8, no. 11, pp. 1111–1121, 2006.

[74] G. Sattler, "Fuel cells going on-board," *Journal of Power Sources*, vol. 86, no. 12, pp. 61 – 67, 2000.

[75] N. Luo, G. Miley, K.-J. Kim, R. Burton, and X. Huang, "Nabh4/h2o2 fuel cells for air independent power systems," *Journal of Power Sources*, vol. 185, no. 2, pp. 685 – 690, 2008.

[76] C. Herskind, M. Morack, and I. I. A. Society, *A History of Mercury-arc Rectifiers in North America*. IEEE, 1987.

[77] B. K. Bose, "Power electronics-an emerging technology," *IEEE Transactions on Industrial Electronics*, vol. 36, no. 3, pp. 403–412, 1989.

[78] B. Bose, "Power electronics-a technology review," *Proceedings of the IEEE*, vol. 80, no. 8, pp. 1303–1334, Aug 1992.

[79] B. K. Bose, "Power electronics and motor drives recent progress and perspective," *IEEE Transactions on Industrial Electronics*, vol. 56, no. 2, pp. 581–588, 2009.

[80] B. Bose, *Power Electronics And Motor Drives: Advances and Trends*. Elsevier Science, 2010.

[81] B. Baliga, M. Adler, P. Gray, R. Love, and N. Zommer, "The insulated gate rectifier (igr): A new power switching device," in *International Electron Devices Meeting, 1982*, vol. 28. IEEE, 1982, pp. 264–267.

[82] P. S. Dawson, *British Superliners of the Sixties: A Design Appreciation of the Oriana, Canberra and QE2*. London: Conway Martime Press, 1990.

[83] ——, *Canberra: In the Wake of a Legend*. Conway Maritime Press, 1997.

[84] N. McCart, *P&O's Canberra - The Ship That Shaped The Future*. Kingfisher Railway Publications, 1989.

[85] A. Vine, *A Very Strange Way to Go to War: The Canberra in the Falklands*. Aurum Press, Limited, 2014.

[86] S. Kim, S. Choe, S. Ko, and S. Sul, "A naval integrated power system with a battery energy storage system: Fuel efficiency, reliability, and quality of power." *IEEE Electrification Magazine*, vol. 3, no. 2, pp. 22–33, June 2015.

[87] T. McCoy, "Trends in ship electric propulsion," in *Power Engineering Society Summer Meeting, 2002 IEEE*, vol. 1, July 2002, pp. 343–346 vol.1.

[88] "QE2 History," http://www.chriscunard.com/qe2_history.php, accessed: 2015-08-17.

[89] "The Cunard Liner Queen Elizabeth 2: From the Desk of the Chief Engineer," http://www.qe2.org.uk/engine.html, accessed: 2015-08-17.

[90] "New home for Queen Elizabeth 2," http://travel.cnn.com/new-home-queen-elizabeth-2-764401, accessed: 2015-08-17.

[91] M. Patel, *Shipboard Electrical Power Systems*, ser. Shipboard Electrical Power Systems. Taylor & Francis, 2011.

[92] A. J. Sørensen, "A survey of dynamic positioning control systems," *Annual Reviews in Control*, vol. 35, no. 1, pp. 123 – 136, 2011.

[93] H. Faÿ, *Dynamic Positioning Systems: Principles, Design and Applications*. Technip, 1990.

[94] "Corvus Energy: CASE STUDY: Norled AS, MF Ampere, Ferry," http://files7.webydo.com/42/421998/UploadedFiles/a4465574-14ff-4689-a033-08ac32adada1.pdf, accessed: 2015-08-20.

[95] L. Roddis, J. Simpson *et al.*, *The Nuclear Propulsion Plant of the USS Nautilus SSN-571*. Society of Naval Architects and Marine Engineers, 1954.

[96] N. Polmar and K. Moore, *Cold War Submarines: The Design and Construction of U.S. and Soviet Submarines*. Brassey's, 2004.

[97] N. R. C. U. P. on Wartime Uses of the United States Merchant Marine, *The Role of the U.S. Merchant Marine in National Security: Project Walrus Report*, ser. National Academy of Sciences. National Research Council. Publication. National Academy of Sciences-National Research Council, 1959.

[98] W. Donnelly, *Nuclear Power and Merchant Shipping*, ser. Nuclear Power and Merchant Shipping. U.S. Atomic Energy Commission, Division of Technical Information, 1964, no. v. 7.

[99] V. Æsøy and D. Stenersen, "Low emission lng fuelled ships for environmental friendly operations in arctic areas," in *ASME 2013 32nd International Conference on Ocean, Offshore and Arctic Engineering*.

American Society of Mechanical Engineers, 2013, pp. V006T07A028–V006T07A028.

[100] K. M. Sandaker *et al.*, "Use of natural gas as fuel for ships," in *19th World Petroleum Congress*. World Petroleum Congress, 2008.

[101] T. G. Osberg and T. H. Tronstad, "Propelling ships for the future-gas engines today, fuel cells tomorrow," *Marine Engineering*, vol. 44, no. 6, pp. 922–933, 2009.

[102] "DNV-GL: Highlight Projects in the LNG as Fuel History," https://www.dnvgl.com/Images/LNG%20as%20fuel%20highlight%20projects_new_tcm8-6116.pdf, accessed: 2015-08-24.

[103] M. Schuler, "Introducing ISLA BELLA Worlds First LNG-Powered Containership Launched at NASSCO)," http://gcaptain.com/isla-bella-worlds-first-lng-powered-containership-launched-at-nassco/#.VdwXkPntlBc, 2015, accessed: 2015-08-25.

[104] N. Doerry, "Naval Power Systems: Integrated power systems for the continuity of the electrical power supply." *IEEE Electrification Magazine*, vol. 3, no. 2, pp. 12–21, June 2015.

[105] "U.S. Navy: Energy, Environment & Climate Chage," http://greenfleet.dodlive.mil/files/2010/04/MakinIslandEnvironmentFactsheet_v2.pdf, accessed: 2015-08-21.

[106] J. Turso, T. Dalton, S. McCullough, C. Mako, C. Bottorff, W. Ainsworth, S. Foster, R. Peden, and D. Johnson, "USS Makin Island Auxiliary Propulsion System: Identification and Accommodation of System-Level Interactions."

[107] "Seatrade Award for DNV GL classed Ampere, world's first fully electric vessel," https://www.dnvgl.com/news/seatrade-award-for-dnv-gl-classed-ampere-world-s-first-fully-electric-vessel--24038, accessed: 2015-08-20.

[108] "Siemens: BlueDrive PlusC," https://w3.siemens.no/home/no/no/sector/industry/marine/Documents/Orig.BDPC_16pages.pdf, accessed: 2015-09-22.

[109] "ABB: The step forward, Onboard DC Grid," http://new.abb.com/docs/librariesprovider91/articles/lm00614-onboard-dc-grid-brochure_june2014_1.pdf?sfvrsn=2, accessed: 2015-09-22.

Espen Skjong (MSc) received his MSc degree in Engineering Cybernetics at Norwegian University of Science and Technology (NTNU) in 2014, specializing in model predictive control (MPC) for autonomous control of UAVs. He is currently employed in Ulstein Power & Control AS as an industrial PhD candidate. His research topic is related to optimization in power management systems for marine vessels. His industrial PhD fellowship is connected to the Center of Excellence on Autonomous Marine Operations and Systems (AMOS) at NTNU.

Egil Rødskar (BSc) received his BSc degree in Electrical Power Systems at *Møre og Romsdal Ingeniør Høyskole* (MRIH) (Møre og Romsdal county's college of engineering in Norway) in 1987. He is currently employed at Ulstein Power & Control AS as Technical Manager within Systems. He has 25 years of experience from marine electrical system engineering and project management for installation and commissioning of marine electrical systems. His experience also covers FMEA/FMECA for marine ship systems and knowledge of ship operations.

Marta Molinas (M'94) received the Diploma degree in electromechanical engineering from the National University of Asuncion, Asuncion, Paraguay, in 1992; the Master of Engineering degree from Ryukyu University, Japan, in 1997; and the Doctor of Engineering degree from the Tokyo Institute of Technology, Tokyo, Japan, in 2000. She was a Guest Researcher with the University of Padova, Padova, Italy, during 1998. From 2004 to 2007, she was a Postdoctoral Researcher with the Norwegian University of Science and Technology (NTNU) and from 2008-2014 she has been professor at the Department of Electric Power Engineering at the same university. From 2008 to 2009, she was a Japan Society for the Promotion of Science (JSPS) Research Fellow with the Energy Technology Research Institute, National Institute of Advanced Industrial Science and Technology, Tsukuba, Japan. In 2014, she was Visiting Professor at Columbia University and Invited Fellow by the Kingdom of Bhutan working with renewable energy microgrids for developing regions. She is currently Professor at the Department of Engineering Cybernetics, NTNU. Her research interests include stability of power electronics systems, harmonics, oscillatory phenomena, and non-stationary signals from the human and the machine. Dr. Molinas has been an AdCom Member of the IEEE Power Electronics Society. She is Associate Editor and Reviewer for *IEEE Transactions on Power Electronics* and *PELS Letters*.

Tor Arne Johansen (MSc, PhD) worked at SINTEF as a researcher before he was appointed Associated Professor at the Norwegian University of Science and Technology in Trondheim in 1997 and Professor in 2001. He has published several hundred articles in the areas of control, estimation and optimization with applications in the marine, automotive, biomedical and process industries. In 2002 Johansen co-founded the company Marine Cybernetics AS where he was Vice President until 2008. Prof. Johansen received the 2006 Arch T. Colwell Merit Award of the SAE, and is currently a principal researcher within the Center of Excellence on Autonomous Marine Operations and Systems (AMOS) and director of the Unmanned Aerial Vehicle Laboratory at NTNU.

Joseph Cunningham: Cunningham's interest in electric power systems dates to his youth when his high school science project, "The Theory and Operation of Alternating Current," was awarded a first-place gold medal. This success led to a scholarship and a degree in physics from St. Francis College of Brooklyn Heights, New York. He has researched and authored numerous booklets, articles, and books on topics such as industrial electrification, electric utility power systems, and electric rail transportation. His latest book, New York Power, was published in 2013 by the IEEE History Center Press. In 1976, he coauthored a definitive three-volume History of the New York City Subway System. He has also lectured and taught widely on the history of electrotechnology and has consulted on numerous history projects and television productions.